Senior Living



ITANI DESIGN CONCEPTS

• HEALTHCARE & COMMERCIAL INTERIOR DESIGN •



Introduction

Itani Design Concepts is partnering with STUDIO E/L to present Artworks for Senior Living residences. Here, you will find our latest releases, and we encourage you to check our website and engage our well-seasoned art consultants to help develop a custom art package to suit your specific Senior Living project.

For Senior Living residents, artwork can stimulate memories and serve as a connection to the world around them. When selecting artwork for a Senior Living facility, be sure to include lots of variety – images and framing – as residents enjoy a wide array of different genres and colors.

Artwork placed in Memory Care residences can inspire the mind and stimulate the senses, with the power to evoke memories. In Memory Care settings, artwork should be bright with high-contrast colors, and subjects should be realistic and literal.

Our team of art consultants is prepared to consult with you to create your own inspired art package. We partner with you through every step of the process, including budgeting, selecting artwork, frame design, delivery, and installation.
We look forward to helping you create an uplifting and healthy environment through the benefits of visual artistry.

- Your Art Team

Table of Contents

Imagery

Landscapes 4

Floral / Still Life 24

Photography 40

Variety / Figurative 52

Abstract 68

Zen Dimensionals / Panelscapes 76

Frame Design Options

Gallery Wrapped Canvas 83

Edge Frame Canvas 84

Float Frame Canvas 85

Framed Canvas 87

Framed Print on Fine Art Paper 88

Sampling of Moulding Options 89

Front Cover
Artist: Joan Élan Davis
Photo Illustration of Framed Canvas w/ 2" Walnut Frame

Inside Cover
Artist: Elise Morris
Photo Illustration of Silver/Bronze Float Frame Canvas w/ Scoop

ITANI DESIGN CONCEPTS
HEALTHCARE & COMMERCIAL INTERIOR DESIGN

Landscapes



Artist: Michael Tienhaara

Photo Illustration of Framed Canvas w/ 2" Warm Silver Frame

These transitional landscapes by Michael Tienhaara complement this contemporary Living Room. We recommend works on canvas to avoid the glare or reflection from works on paper framed under acrylic or glass, which can be challenging for "senior eyes."



TR45618



TR45619



TR43567



TR43568



TR44419



TR44420

Jennifer Gardner



TR46910



TR46911



TR46914



TR46915



TR46916



TR46919

Jennifer Gardner



TR46942



TR46943



TR46940



TR46941



TR46920



TR46922

David Skinner



TR45736



TR45733



TR45734



TR45737



TR45740



TR45742

David Skinner



TR45730



TR45729



TR45727



TR45732



TR45731

Susan Sarback



TR45989



TR45990



TR45993



TR45992

Susan Sarback



TR45984



TR45985



TR45991



TR45988

Judy Miller



TR46136



TR46137



TR46139



TR46140

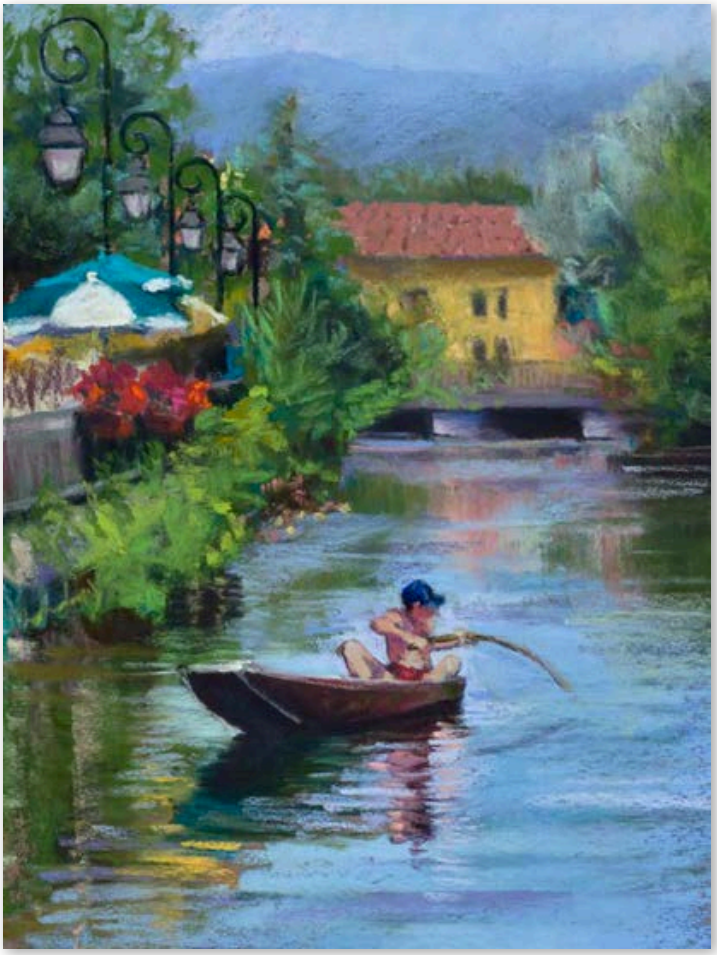

TR46134



TR46133



TR46132



TR46129



TR46130

Lise Temple



TR44032



TR44034



TR44025



TR44026

Lise Temple



TR44021



TR44023



TR44015



TR44016

Sue Jachimiec



TR46557



TR46558



TR46559



TR46560



TR46567



TR46568

Sue Jachimiec



TR46561



TR46562



TR46563



TR46564



TR46565



TR46569

Nathaniel Mather



TR45688



TR45689



TR45690



TR45691



TR45693



TR45692



TR45687



TR45685



TR45686



TR46477



TR46478



TR46493



TR46494

Ellen Dieter



TR46226



TR46228



TR46231



TR46232



TR46233



TR46235



TR46418



TR4 6 417



TR46425



TR4 6 419



TR4 6 426



TR46416

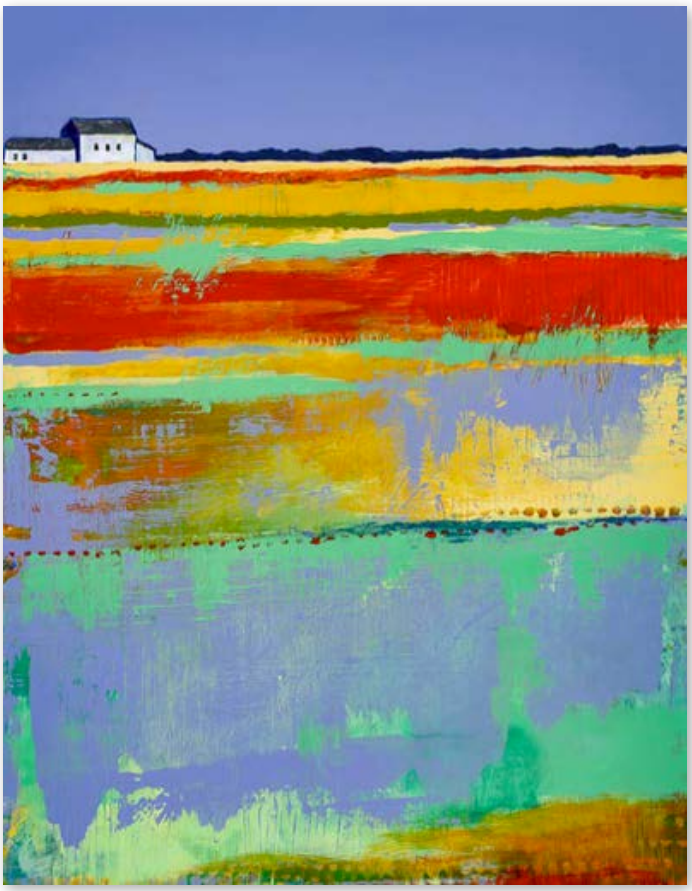

TR46420



TR46427



TR4 6 428

Floral / Still Life



Artist: Jill Krasner

Photo Illustration of Stretched Canvas with Antique Gold w/ Espresso Float Frame

A series of related artwork placed down a corridor can evoke memories from residents' long and full lives. This corridor is brightened and enlivened by the placement of Jill Krasner's playful, transitional florals, elegantly presented in gold-faced float frames.



TR46470



TR46472



TR4 6 4 65



TR4 6 4 66



TR4 6 479



TR4 6 480

Jill Krasner



TR46501



TR4 6 4 69



TR4 6 499



TR46498



TR4 6 497



TR46500



TR46502



TR46503

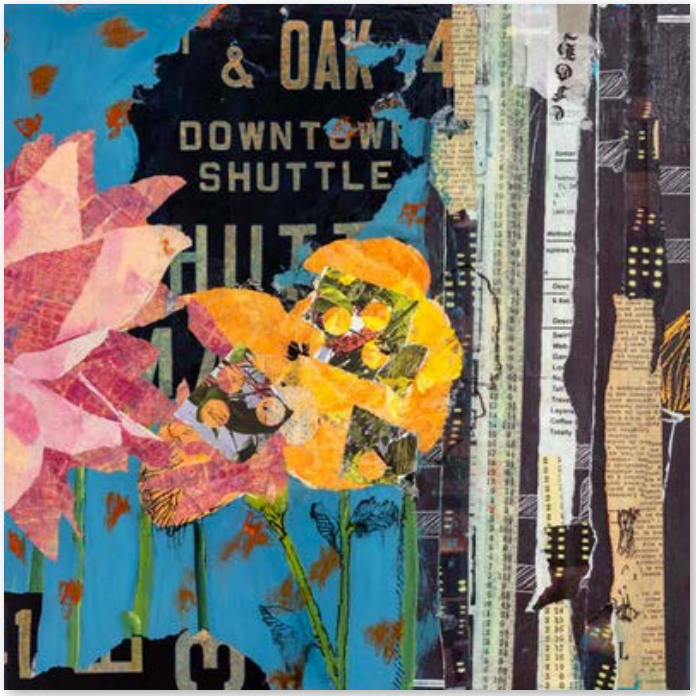

TR46504

Nathaniel Mather



TR45683



TR45684



TR44352



TR45700



TR44363



TR44342



TR44343



TR44358



TR44359



TR46029



TR4 6030



TR46031



TR4 6032



TR46034



TR4 6039



TR4 6035



TR46037



TR4 6038



TR47197



TR47198



TR47206



TR47209



TR47208



TR47207

Joan Élan Davis



TR47204



TR47205



TR47189



TR47190



TR47187



TR47188

Grace Carlon



TR47126



TR47132



TR47134



TR47135



TR47150



TR47151



TR47156



TR47155



TR47152



TR47154



TR47153

Elise Morris



TR44971



TR44970



TR44969



TR44968



TR44973



TR44972



TR33522



TR33519



TR33520

Debbie Wolff



TR45218



TR45241



TR45222



TR45264



TR45248



TR45266



TR45234



TR45232



TR45226



TR45231



TR45238



TR45239

Photography



Artist: Dianne Poinski

Photo Illustration of Framed Canvas w/ 2" Walnut Frame

Corridor artwork installed on opposite walls in a "zigzag" pattern is highly effective in creating a less institutional "bowling alley" effect in long hallways. This layout allows you to skip walls thereby stretching your art budget.

Donald Paulson



TR45826



TR45827



TR45828



TR45829



TR45854



TR45857



TR45806



TR45807



TR45810



TR45811

Donald Paulson



TR45875



TR45876



TR45878



TR45880



TR46614



TR46619



TR4 6624



TR4 6626



TR4 6632



TR46634



TR46595



TR46596

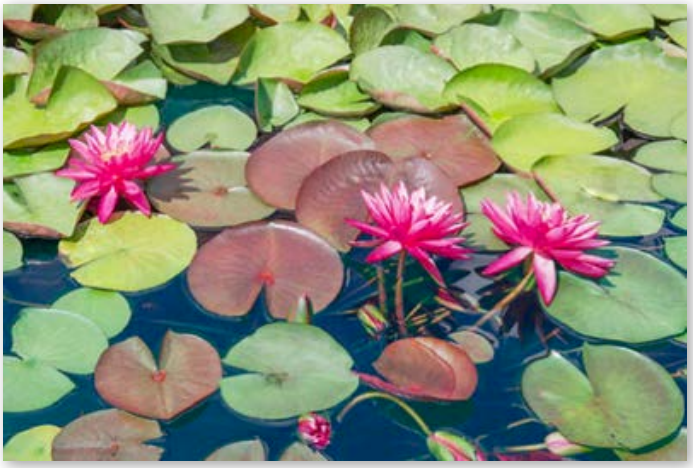

TR46598



TR46599



TR4 6655



TR4 6656



TR45391



TR45390



TR45389



TR42125



TR42124



TR42123

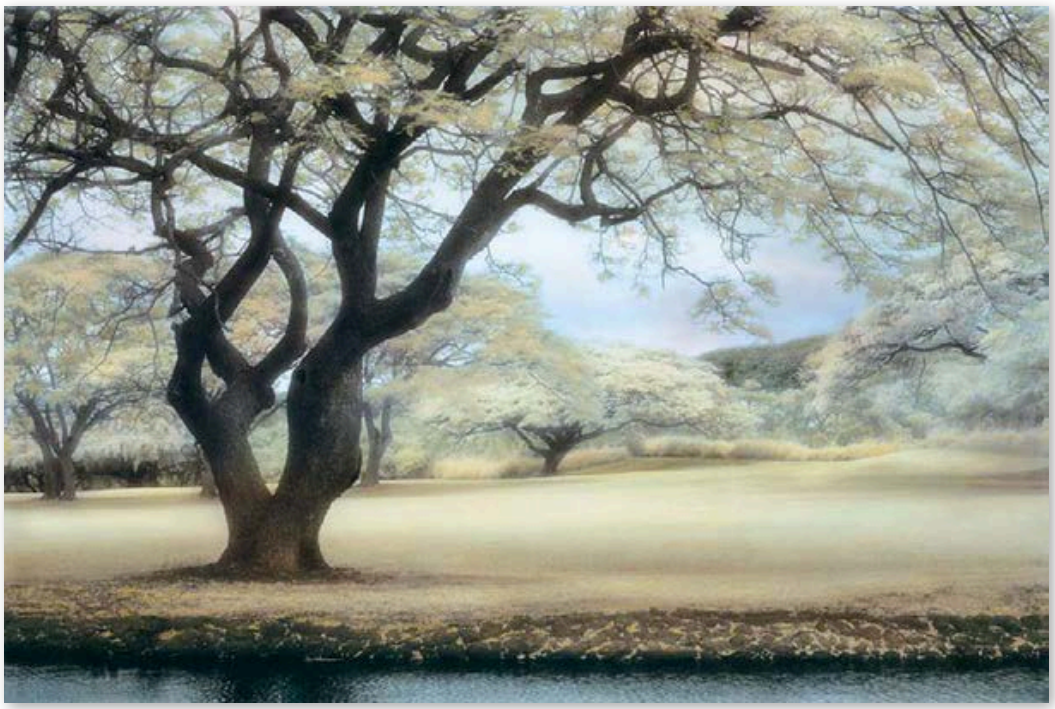

TR45384



TR45382



TR45383

1X Collection



TR46991



TR46992



TR46996



TR47001



TR47002



TR47022

1X Collection



TR47017



TR47020



TR47009



TR47013



TR43298



TR47018



TR46729



TR46730



TR46731



TR46727



TR46725



TR46732

Donna Geissler



TR44621



TR44622



TR44626



TR44627



TR44629



TR44630

Variety / Figurative



Artist: Gale S. McKee

Photo Illustration of Silver/White Float Frame Canvas w/ Scoop (left)

Residents walk up and down corridors an average of 7 times a day, thus corridor art is a very important part of *engagement* for residents in Senior Living facilities. Use representational imagery as an opportunity to set up visual stories in series and engage residents in life-time memories.



TR4 6 409



TR46405



TR4 6 406



TR4 6 408



TR4 6 404



TR4 6 407



TR42866

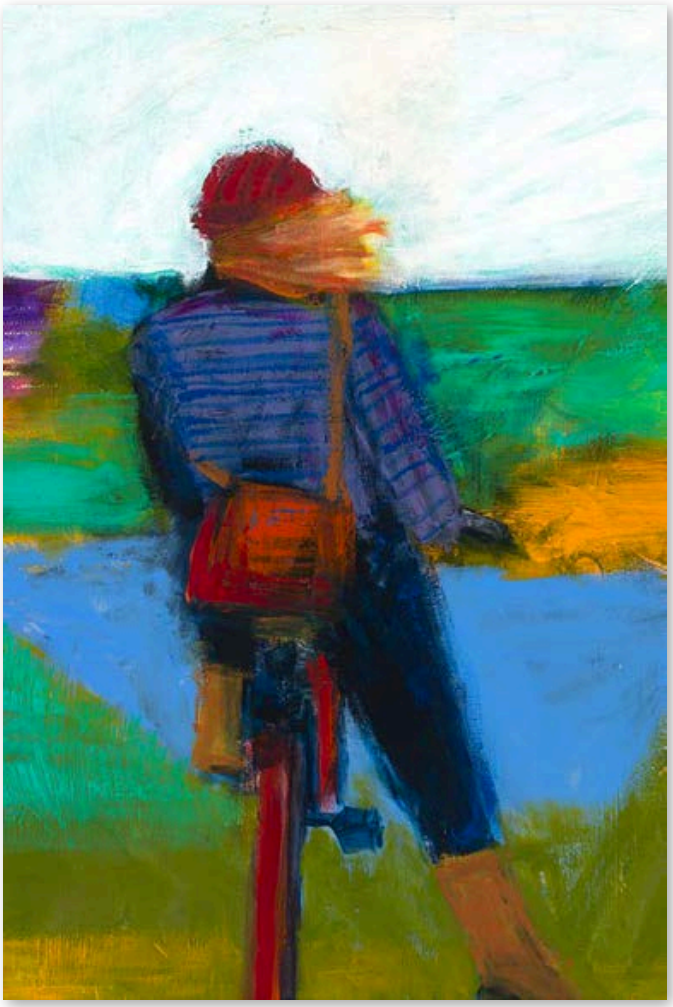

TR42873



TR42867



TR42870



TR42874



TR4 6395



TR4 6393



TR46392



TR4 6394



TR44165



TR44166



TR44167



TR45277



TR45279



TR45280



TR44156



TR44157



TR44159



TR44160



TR46907



TR46909

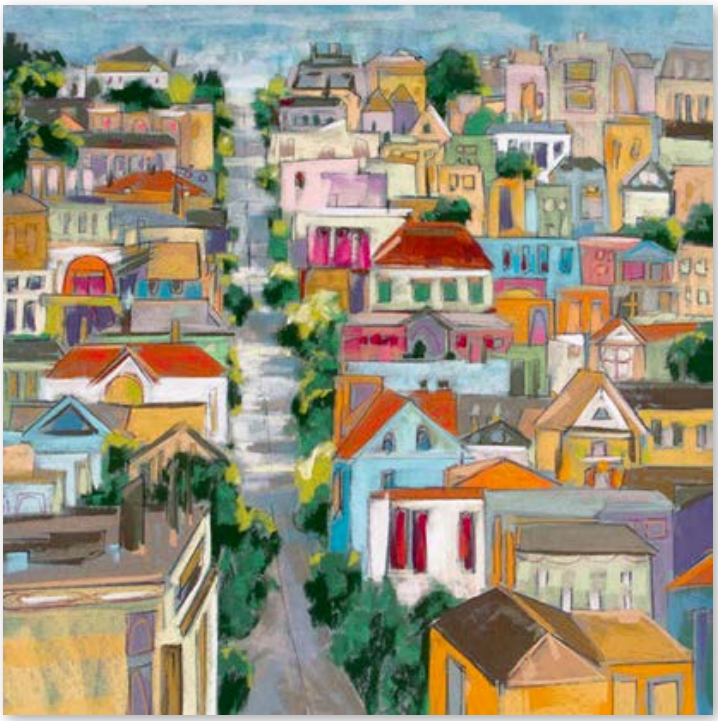

TR46905



TR46906



TR46892



TR4 6895



TR46902



TR46903

Ellen Dieter



TR46217



TR46218



TR46219



TR46216



TR46213



TR46214



TR46222



TR46223



TR46224



TR46225



TR44360



TR45703



TR45704



TR45706

Nathaniel Mather



TR44354



TR44365



TR45697



TR45698



TR46864

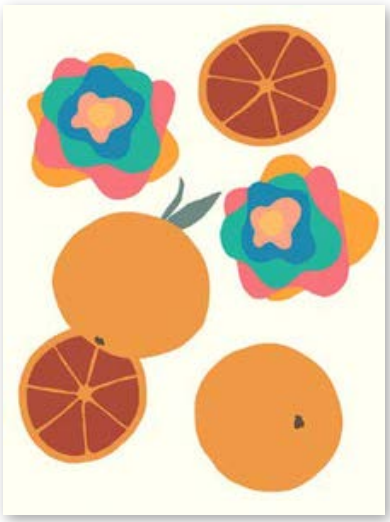

TR46865



TR46867



TR46868



TR46869



TR4 6870



TR43976



TR43977



TR43979



TR43981



TR43982



TR43984



TR46714



TR46715



TR46719



TR46720



TR46707



TR46708



TR46712



TR46713



TR46721



TR46722



TR46709



TR46710

Abstract



Artist: Andrea Pramuk

Photo Illustration of Framed Canvas w/ 2" Walnut Frame

We prefer placing abstract imagery mostly in public spaces like dining, living, and waiting rooms, generally not as much in corridors, where we prefer to curate very recognizable, realistic imagery.

Sue Jachimiec



TR46550



TR46553



TR46551



TR46555



TR46554

Lori DuBois



TR46761



TR46762



TR46837

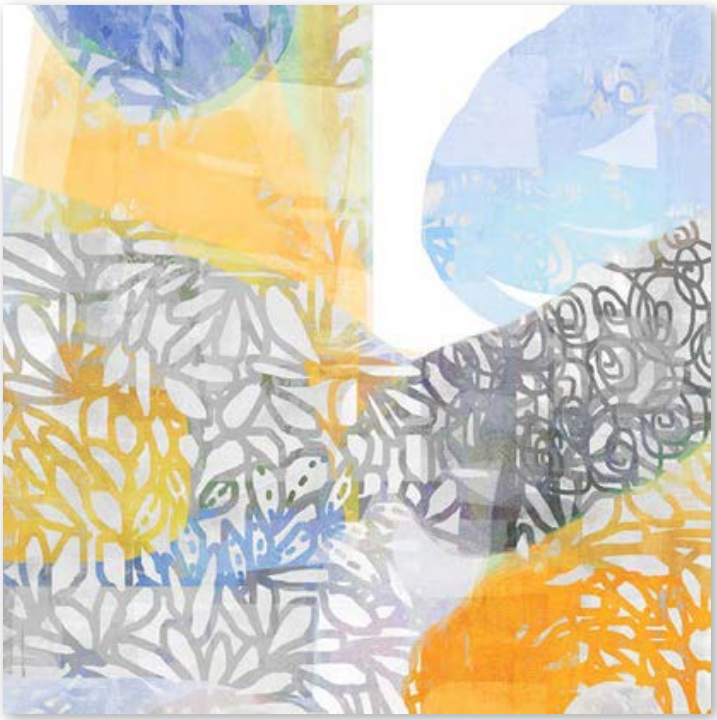

TR4 6838



TR46856

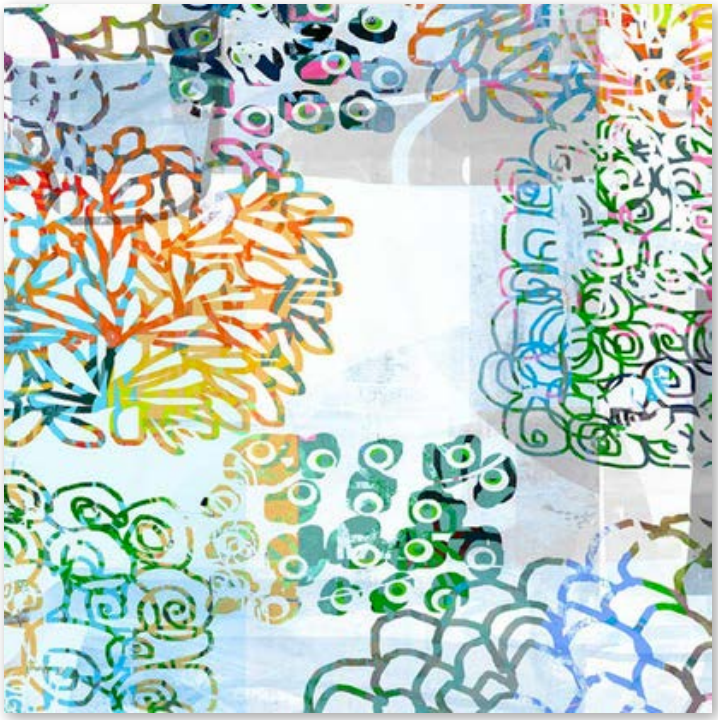

TR4 6857



TR46858



TR46859



TR44290



TR44291



TR44298



TR44301

Andrea Pramuk

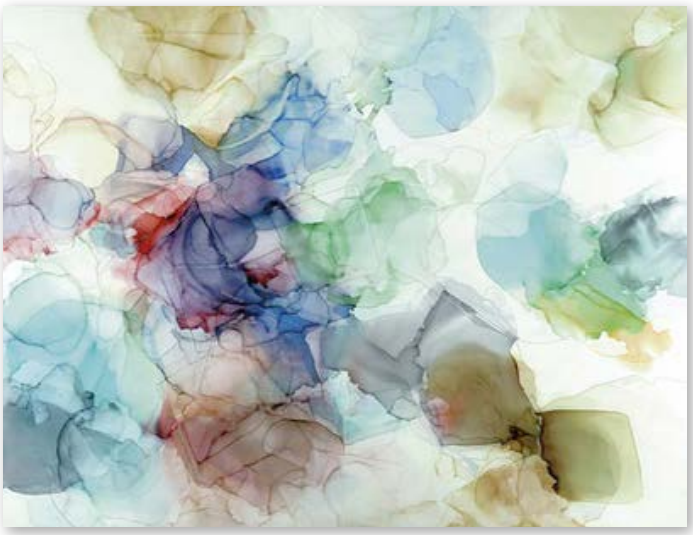

TR47173



TR47174



TR47169



TR47170



TR47185



TR47186

Helen Wells



TR46022



TR4 6023



TR46024

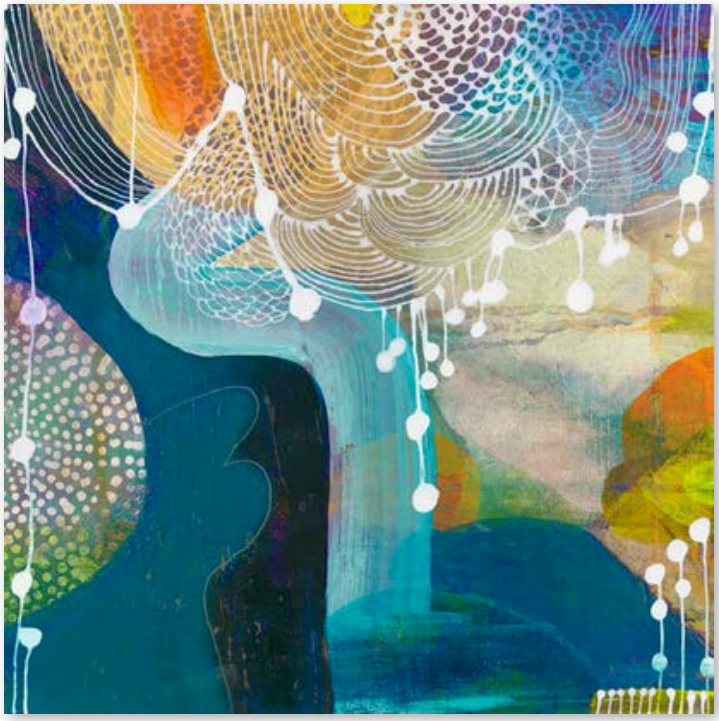

TR4 6026

Helen Wells



TR46009



TR4 6010



TR4 6018



TR4 6019



TR4 6016



TR4 6017

Zen Dimensionals / Panelscapes



Artist: Florence Delva

Photo Illustration of Zen Landscape Dimensionals printed on Canvas, Brushed Aluminum and Acrylic

Dimensional Artwork provides an ideal statement piece for focal walls, i.e. high traffic, important areas such as entrance, reception, and waiting spaces. These “wow” pieces feature calming images printed on a variety of substrates and arrive ready-to-hang with a hidden frame and security hardware.



TR45154-DIM



TR45167-DIM



TR45178-DIM

Zen Dimensionals



TR39231-DIM



TR39232-DIM



TR39223-DIM



TR39227-DIM



TR33957

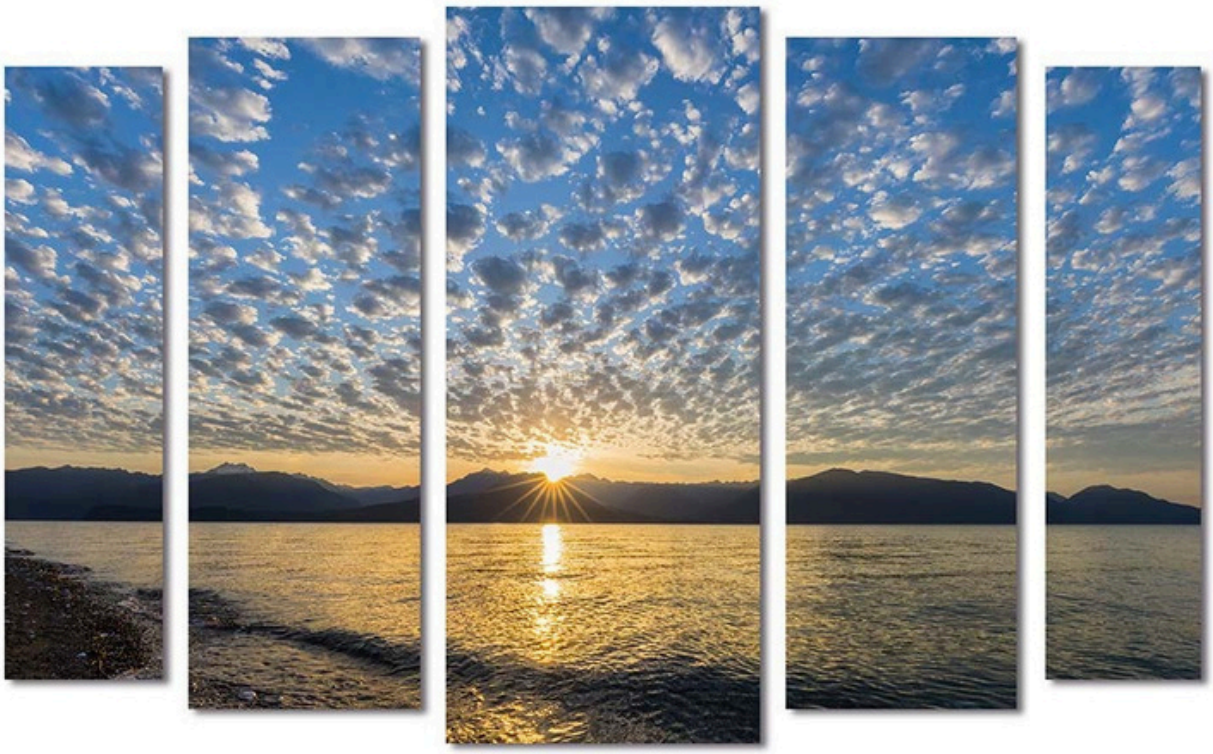

TR40608

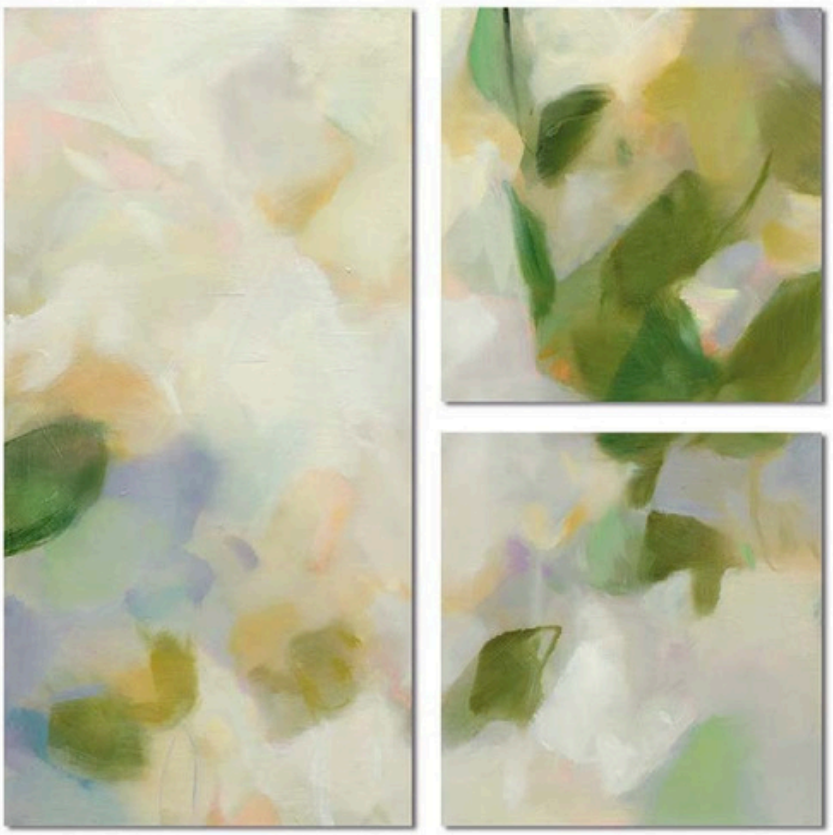

TR34811



TR34821

We Are Custom Framers!

Art Consulting • Art Design • Manufacturing • Framing • Installation



Float Frame Canvas in Silver/White

- Gallery Wrapped Canvas
- Edge Frame Canvas
- Float Frame Canvas
- Framed Canvas
- Framed Prints on Fine Art Paper
- Sampling of Moulding Options

IDC

ITANI DESIGN CONCEPTS | 661.549.5886 | WWWITANIDC.COM



Gallery Wrapped Canvas

An archival qualitycanvas with 1- ½" depth and mirrored borders, available with hardbacking for extra durability. Also available: 2" depth without hardbacking. Our scratch resistant inks are ideal for commercial use.

All artwork is hard-backed (except where indicated), so it's puncture resistant and comes ready-to-hang with 3-point or 4-point security hardware:



Puncture resistant canvas with hardboard backing.



T-head screw

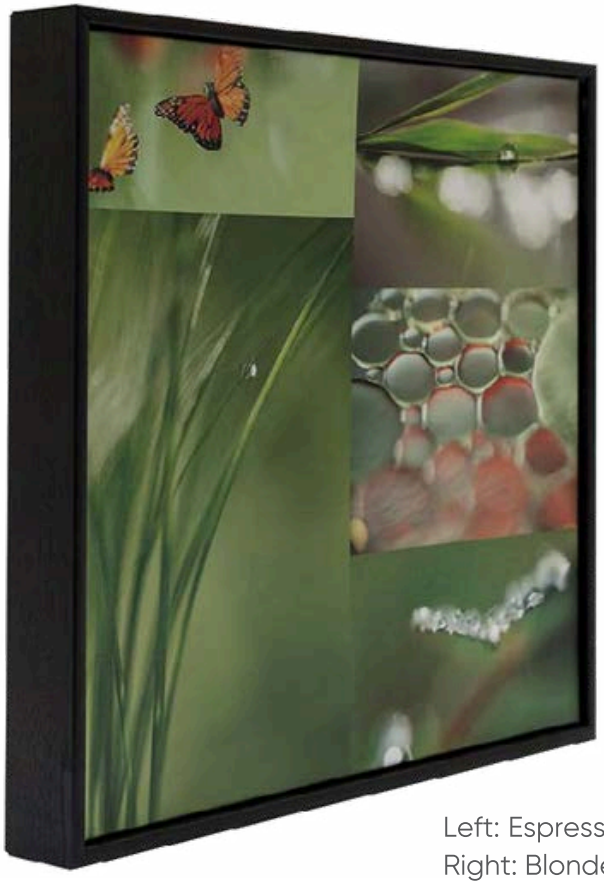

Edge Frame Canvas

Frame measures 1/4" on the face and 1-1/2" in depth with artwork printed on archival quality canvas, hard-backed for extra durability. Our scratch-resistant inks are ideal for commercial use. These MDF frames are available in finishes shown below.

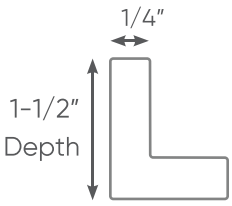



Left: Espresso with woodgrain finish E6
Right: Blonde with woodgrain finish E2



Edge Framed Canvas
finish options:

E1 White
satin finish

E2 Blonde
woodgrain finish

E4 Gold
E3 Silver
antique finish

E5 Cherry
woodgrain finish

E6 Espresso
woodgrain finish

E7 Black
satin finish

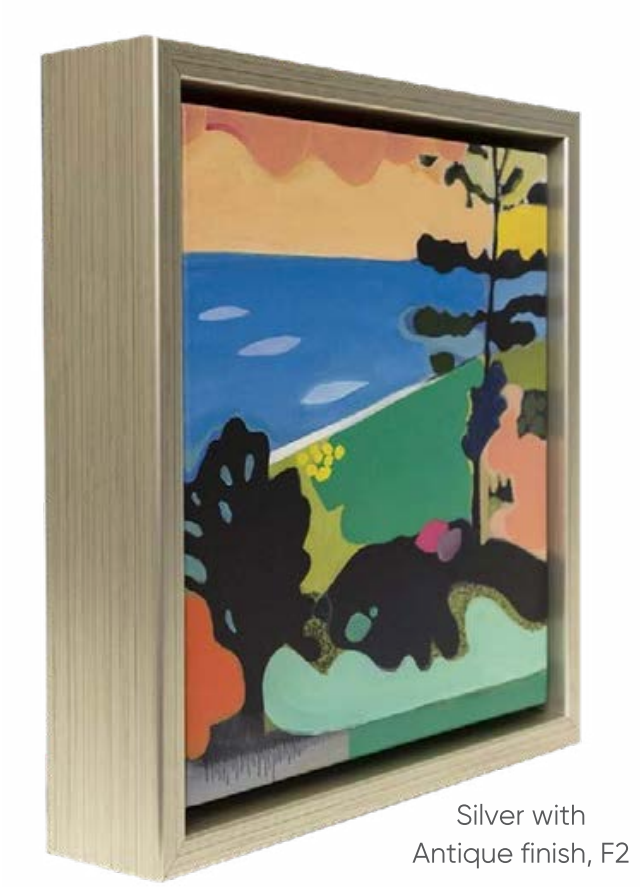

Silver with
Antique finish, F2

Float Frame Canvas

Featuring a 2-3/8″ or 1-3/8″ deep float frame with artwork printed on archival quality canvas, hard-backed for extra durability. Our scratch-resistant inks are ideal for healthcare, hospitality, or corporate placement. Now offering seven in-stock finishes.

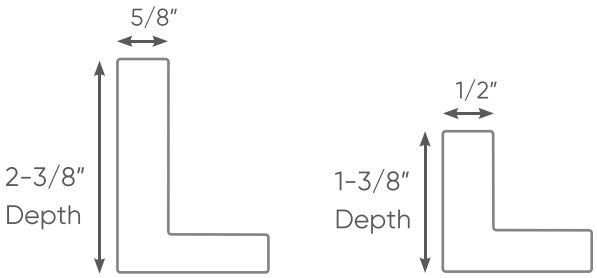



F1 White
satin finish

F2 Silver
antique finish

F3 Gold
antique finish

F4 Espresso
satin finish
woodgrain finish

F5 Black



F6 Antique Silver w/Espresso
woodgrain finish



F7 Antique Gold w/Espresso
woodgrain finish



Silver face with White Satin finish, F16B

Float Frame Canvas with Scoop

This 2-3/8" deep Float Frame option adds depth and richness to any work of art. Artwork printed on archival quality canvas, hard-backed for extra durability. Our scratch-resistant inks are ideal for healthcare, hospitality, or corporate placement—8 available finishes.

Solid Colors:



Two-tone Colors:

Face color is listed first, followed by the outer & scoop color.

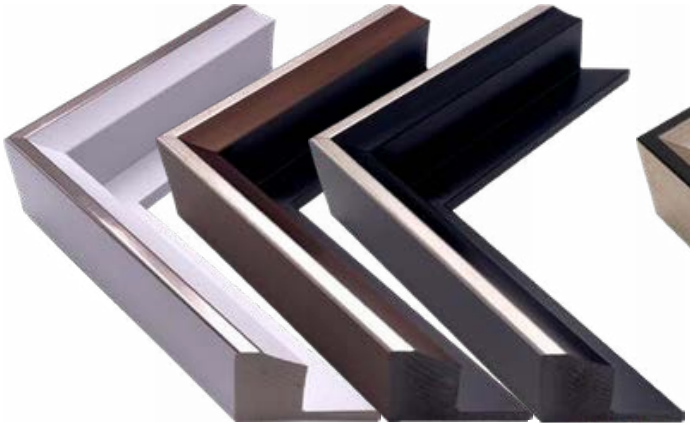

F16B Silver / White satin finish

F17B Silver / Bronze antiquefinish

F20B Silver w/ Black satinfinish

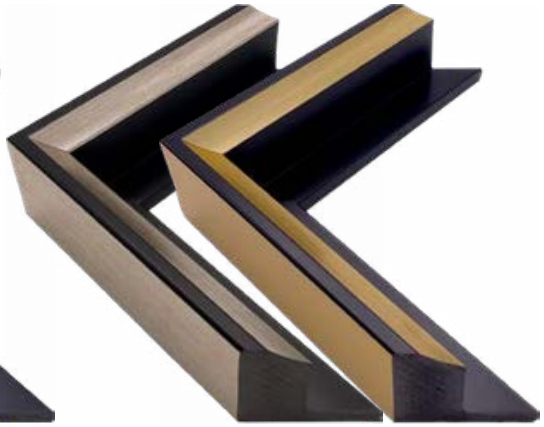

F21B Black / Silver antiquefinish

F22B Black / Gold antiquefinish



2" wide frame
used on a 24"x36" piece.

Framed Canvas

A print on canvas with a 2" wide or 3-1/2" wide frame (*larger size only available in colors 26-07A Black and 26-06A Espresso), mounted to 1/8" hardboard backing, making the art puncture resistant. Our scratch-resistant inks are ideal for commercial use. Frame shown is 2" wide.

Ask your sales representative about additional frame options.

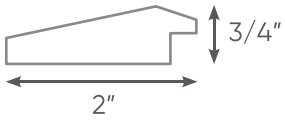

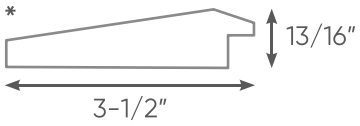

25-01A White
satin finish



25-02A Silver
antique finish



25-03A Gold
antique finish



25-04A Espresso & Silver
woodgrain finish



25-05A Espresso & Gold
woodgrain finish



25-06A Espresso*
woodgrain finish



25-07A Black*
satin finish



25-08A Black & Silver
antique finish



25-09A Black & Gold
antique finish

Framed image for illustration purposes only.



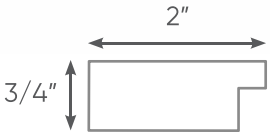

Print on Paper, Matted and Framed Under Glazing

A print on fine art textured or smooth white paper, mounted with hard backing and placed under a variety of mat options. Framed under glass or acrylic, our museum-quality works on paper offer fine detail, vivid colors and deep blacks.

Ask your sales representative about additional frame and mat options.



Sample Mat:
Smooth White



20-01A White
satin finish



20-02A Lt. StainlessSteel
antique finish



20-03A Warm Silver
antique finish



20-04A Gold
antique finish



20-05A Beige
woodgrain finish



20-06A Oak
woodgrain finish



20-07A Stainless Steel
woodgrain finish



20-08A Grey
woodgrain finish



20-09A Walnut
woodgrain finish



20-10A Bronze
woodgrain finish



20-11A Dark Walnut
woodgrain finish



20-12A Espresso
woodgrain finish



20-13A Black
woodgrain finish



20-14A Black
satin finish

Framed image for illustration purposes only.

Traditional Mouldings

Light Tone

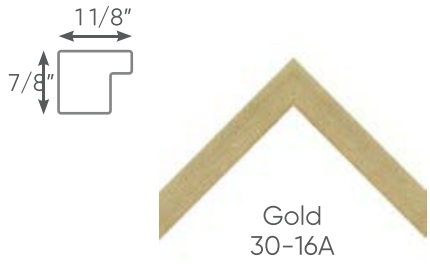

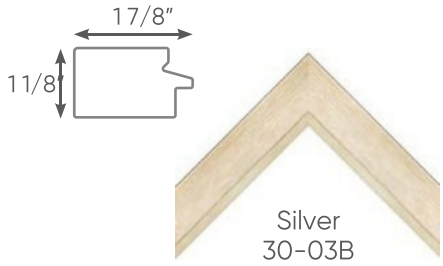

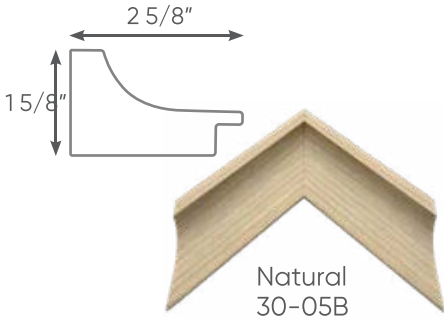

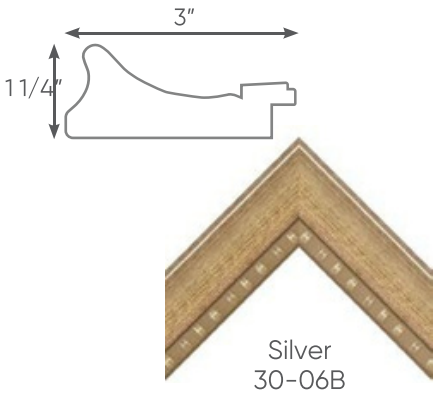



Medium Tone

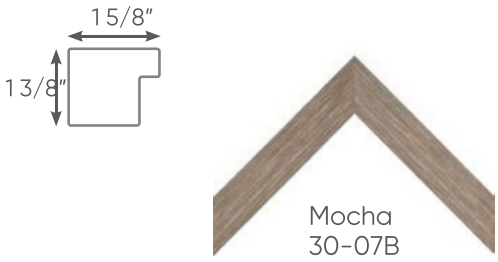

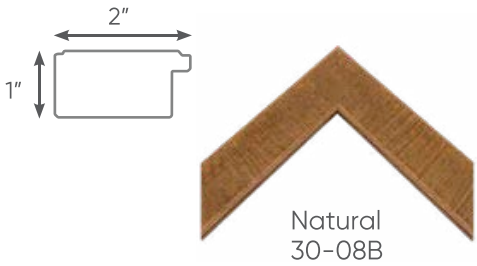

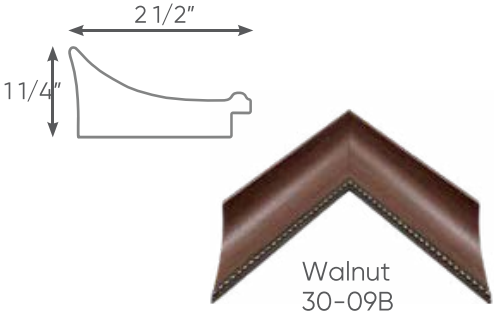

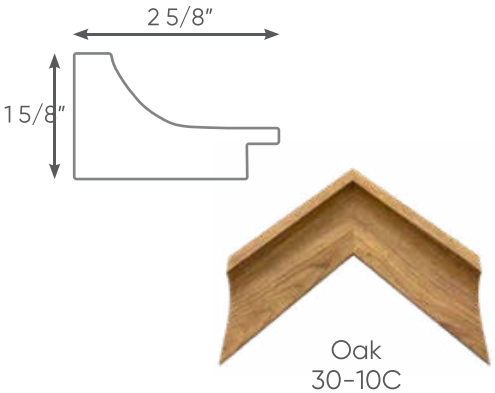

Dark Tone

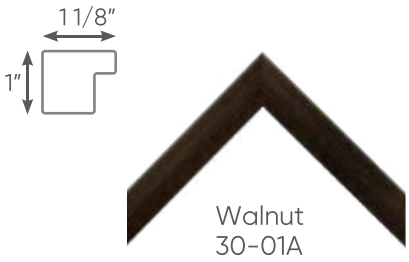

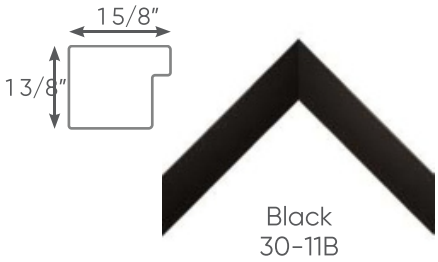

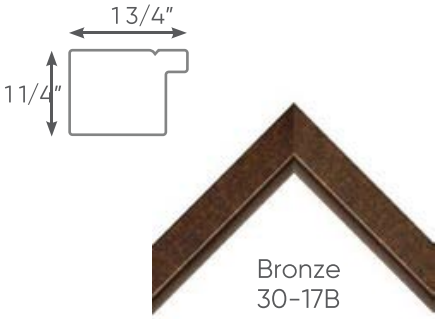

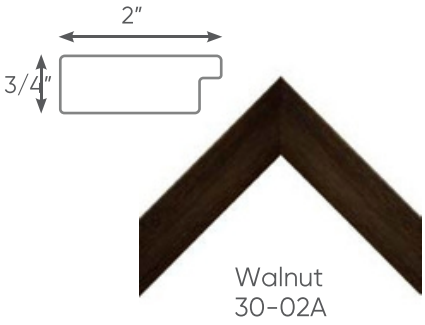

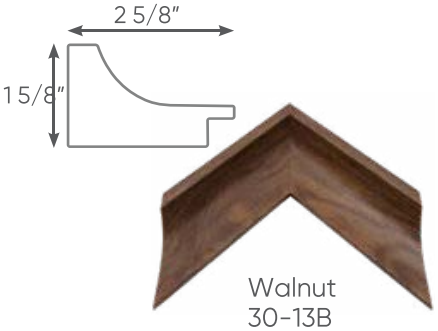

Additional framing options available upon request.

Contemporary Light & Medium Mouldings

Light Tone

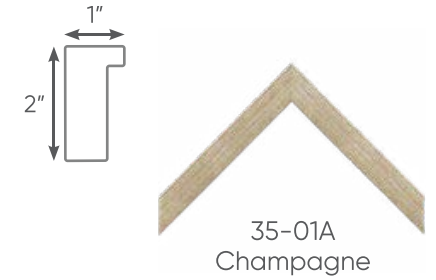

35-01A
Champagne

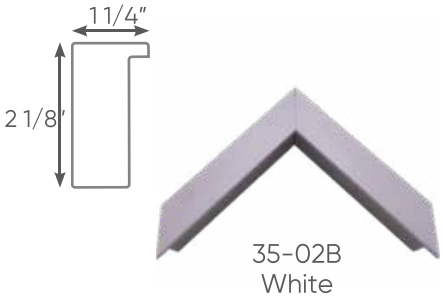

35-02B
White

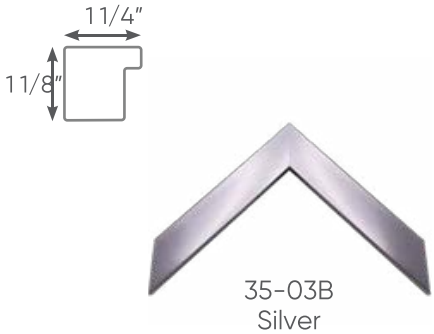

35-03B
Silver

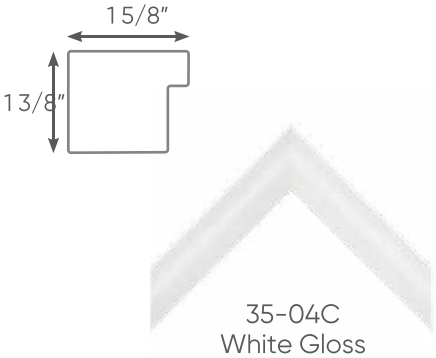

35-04C
White Gloss

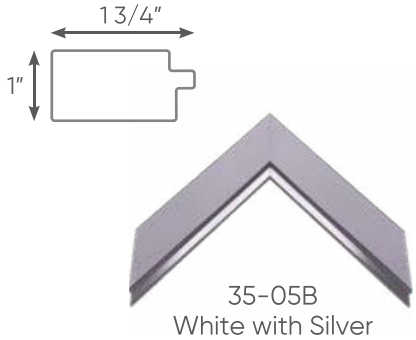

35-05B
White with Silver

Light Tone



35-06B
White Woodgrain

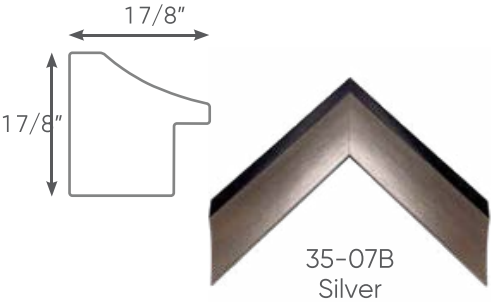

35-07B
Silver

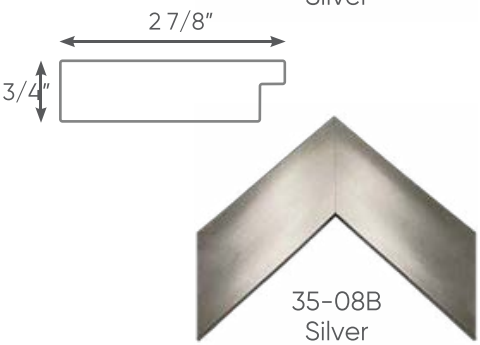

35-08B
Silver

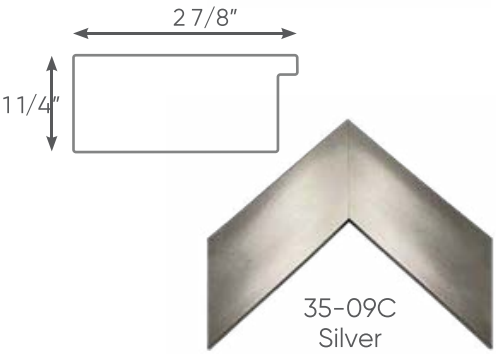

35-09C
Silver

Medium Tone

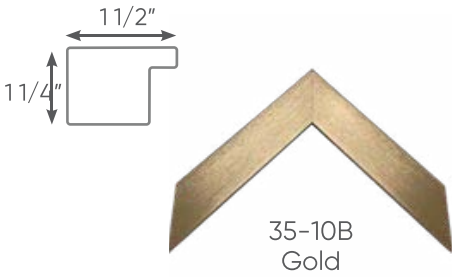

35-10B
Gold

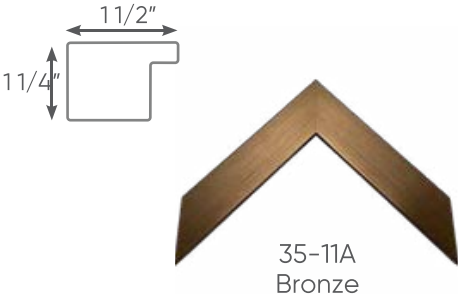

35-11A
Bronze

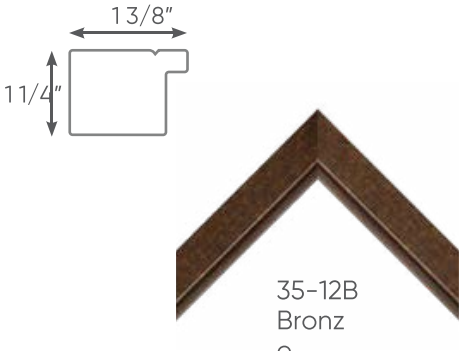

35-12B
Bronz
e

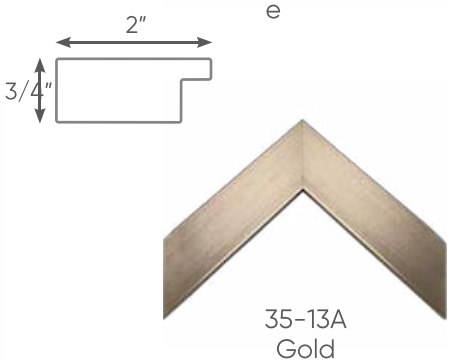

35-13A
Gold

Additional framing options available upon request.

Dark Tone

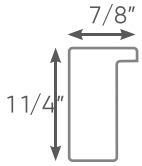



40-01A
Black

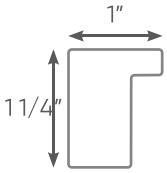



40-02A
Walnut

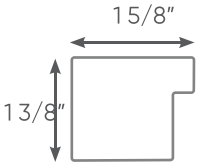

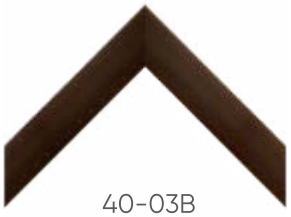

40-03B
Black with Brown

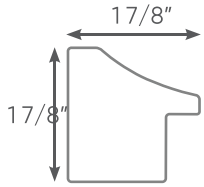



40-08B
Espresso with Silver

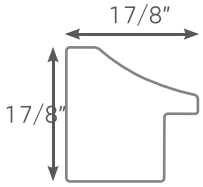



40-04B
Black with Silver

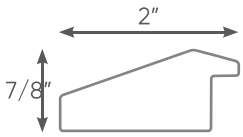



40-05A
Matte Black

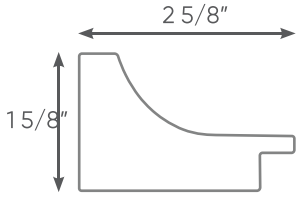



40-06B
Black Woodgrain

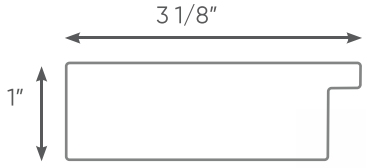



40-07A
Dark Walnut

Additional framing options available upon request.

Senior Living

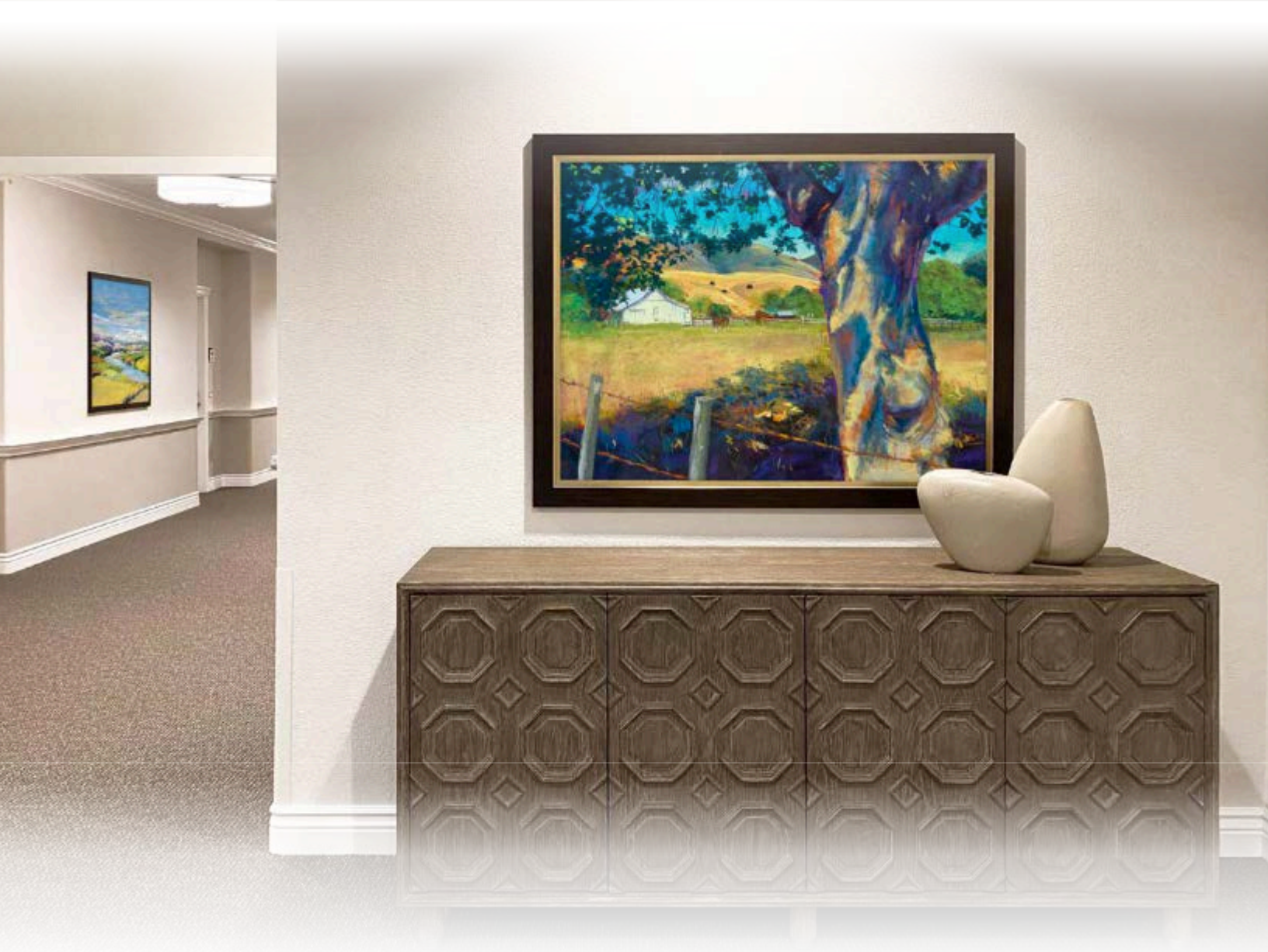

ITANI DESIGN CONCEPTS

• HEALTHCARE & COMMERCIAL INTERIOR DESIGN •

GHINA ITANI
661.549.5886
ghina@itanidc.com
WWW.ITANIDC.COM
GC LIC# 933275

CHID Certified Healthcare Interior Designer™ · NCIDQ Certified · edac from The Center for Health Design · AMERICAN SOCIETY OF INTERIOR DESIGNERS · ASID