

ITANI DESIGN CONCEPTS

• HEALTHCARE & COMMERCIAL INTERIOR DESIGN •

Artwork for Pediatrics

Juvenile and Family Healthcare Environments



Introduction

Itani Design Concepts is partnering with STUDIO E/L to present Artworks for Pediatrics, Family, and Juvenile Healthcare Environments. Within these pages, you will find our latest releases and most popular artwork for juvenile healthcare settings. Our well-seasoned art consultants have curated a broad collection of artwork supported by Evidence-Based Design theory, which strives to promote and enhance healing, well-being, and calm throughout these important care interiors.

Skillfully selected healthcare art can be a positive distraction for young patients and their families and a proven source of stress relief for staff. Accordingly, an effectively curated juvenile art program supports a more welcoming environment that is "de-institutionalized," friendly — even playful — while being accessible to all.

Our Pediatrics Sourcebook provides a variety of styles and color palettes, and each page of this catalog features artwork that can be installed collectively – so you can confidently "purchase by the page" to ensure natural flow and continuity, knowing that each page of artwork is harmonized through complementary subject matter and colors.

Our team of art consultants is prepared to consult with you to create your inspired art program. We partner with you through every step of the process, including selecting artwork, budgeting, frame design, delivery, and installation.

We look forward to helping you create an uplifting and healthy environment through the benefits of visual artistry.

- Your Art Team



Artist: Jacqueline Dee Parker
"Leaving the Carnival"
TR46205

Table Of Contents

Artwork for Pediatrics, Family and Juvenile Healthcare Environments

Product Details

Gallery Wrapped Canvas 1

Framed Canvas 2

Edge Framed Canvas 3

Float Framed Canvas 4

Framed Print on Fine Art Paper 5

Sampling of Moulding Options 6

Pediatrics Imagery

Animals and Figurative 8

Abstract 32

Photography 44



ITANI DESIGN CONCEPTS
HEALTHCARE & COMMERCIAL INTERIOR DESIGN

Gallery Wrapped Canvas



Gallery Wrapped Canvas

A high-quality canvas, with mirrored borders, also available with hardboard backing for extra durability. Gallery wrapped canvas has a 2" depth (stretched only) or 1- ½" depth (when hardbacked). Our inks provide durability and scratch resistance, ideal for commercial use.

All artwork is hard-backed, so it's puncture resistant and comes ready-to-hang with 3-point or 4-point security hardware:



Puncture resistant canvas with hardboard backing.





T-head screw



Framed Canvas



Framed Canvas

A print on canvas, mounted to ⅛" hardboard backing, making the art puncture resistant. Our inks provide durability and scratch resistance, ideal for commercial use. Frame shown is 2" wide. Also available: 3-1/2" wide.

Ask your sales representative about additional frame options.

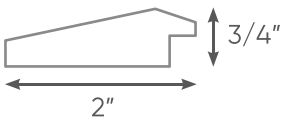

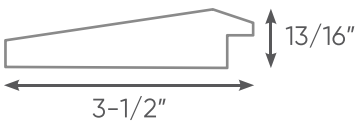

25-01 White
satin fi nish



25-02 Silver
antique fi nish



25-03 Gold
antique fi nish



25-04 Espresso & Silver
woodgrain fi nish



25-05 Espresso & Gold
woodgrain fi nish



25-06 Espresso
woodgrain fi nish



25-07 Black
satin fi nish



25-08 Black & Silver
antique fi nish



25-09 Black & Gold
antique fi nish

Framed image for illustration purposes only.



Edge Frame Canvas

Edge Frame Canvas is comprised of artwork printed on high-quality canvas, hard-backed for extra durability. In addition, our inks provide durability and scratch resistance, which is ideal for commercial use. The canvas is framed with an MDF frame in various fi nishes shown below.

This MDF frame measures 1/4" on the face and 1-1/2" in depth.



Left: Espresso with woodgrain fi nish E6
Right: Blonde with woodgrain fi nish E2

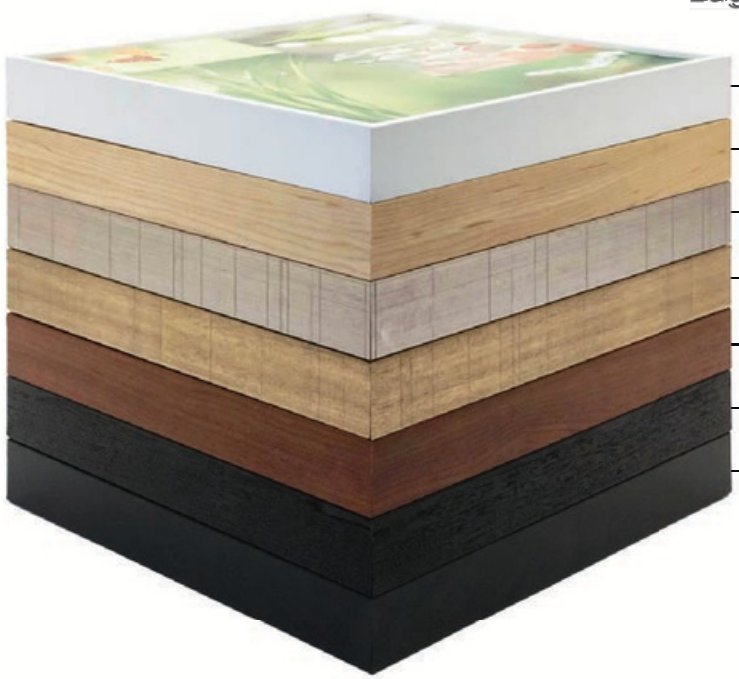

Edge Framed Canvas
fi nish options:

E1 White
satin fi nish

E2 Blonde
woodgrain fi nish

E4 Gold
antique fi nish

E5 Cherry
woodgrain fi nish

E3 Silver
antique fi nish

E6 Espresso
woodgrain fi nish

E7 Black
satin fi nish

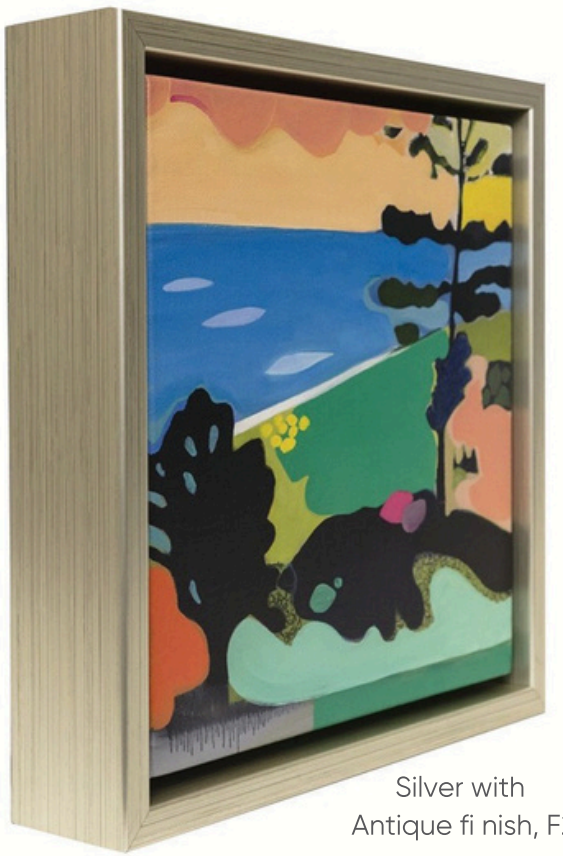

Silver with
Antique fi nish, F2

Float Frame Canvas

Our Float Frame Canvas is comprised of artwork printed on high-quality canvas, and hard-backed for extra durability. Our inks are durable and scratch-resistant – ideal for healthcare, hospitality, or corporate placement. Float Frame Canvas features a 2-3/8" deep fl oat frame. Now off ering seven in-stock fi nishes. Also available: 1-3/8" deep.

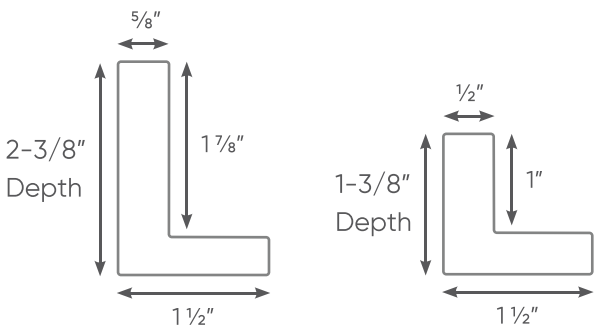



F1 White
satin fi nish

F2 Silver
antique fi nish

F3 Gold
antique fi nish

F4 Espresso
woodgrain fi nish

F5 Black
satin fi nish



F6 Antique Silver w/Espresso
woodgrain fi nish



F7 Antique Gold w/Espresso
woodgrain fi nish

Framed Print on Fine Art Paper



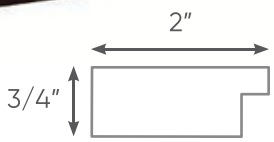

Print on Paper, Matted and Framed Under Glazing

A print on fi ne art textured or smooth white paper, mounted with hard backing and placed under a variety of mat options. framed under glass or acrylic, our museum-quality works on paper off er fi ne detail, vivid colors and deep blacks.

Ask your sales representative about additional frame and mat options.



Sample Mat:
Smooth White



20-01A White
satin fi nish



20-08A Grey
woodgrain fi nish



20-02A Lt. Stainless Steel
antique fi nish



20-09A Walnut
woodgrain fi nish



20-03A Warm Silver
antique fi nish



20-10A Bronze
woodgrain fi nish



20-04A Gold
antique fi nish



20-11A Dark Walnut
woodgrain fi nish



20-05A Beige
woodgrain fi nish



20-12A Espresso
woodgrain fi nish



20-06A Oak
woodgrain fi nish



20-13A Black
woodgrain fi nish



20-07A Stainless Steel
woodgrain fi nish



20-14A Black
satin fi nish

Framed image for illustration purposes only.

Contemporary Light & Medium Mouldings

Light Tone

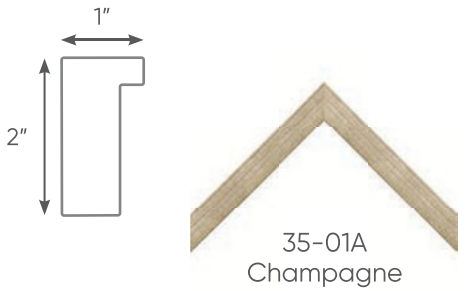

35-01A
Champagne

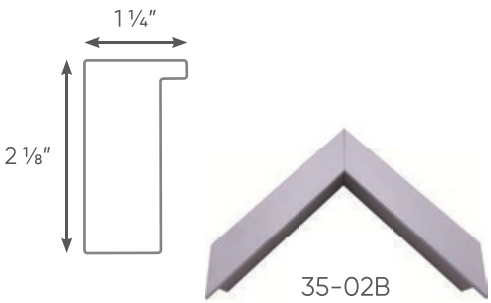

35-02B
White

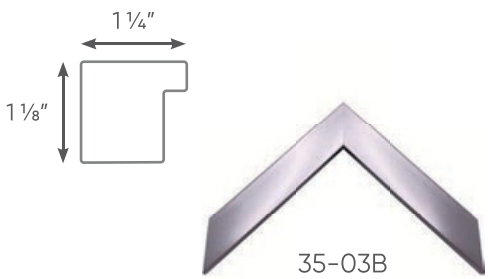

35-03B
Silver

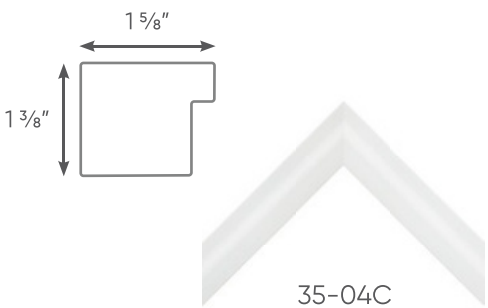

35-04C
White Gloss

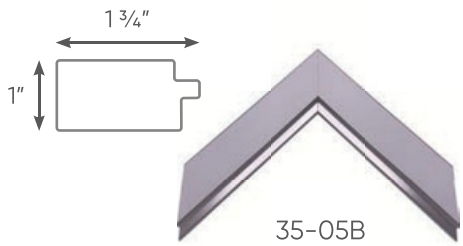

35-05B
White with Silver

Light Tone

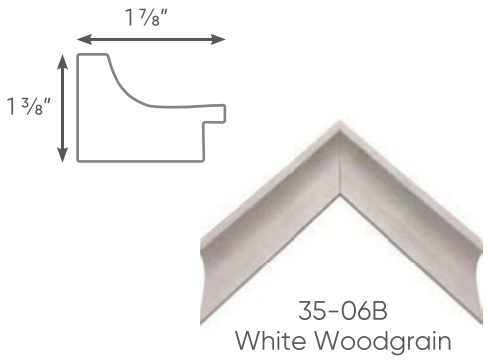

35-06B
White Woodgrain

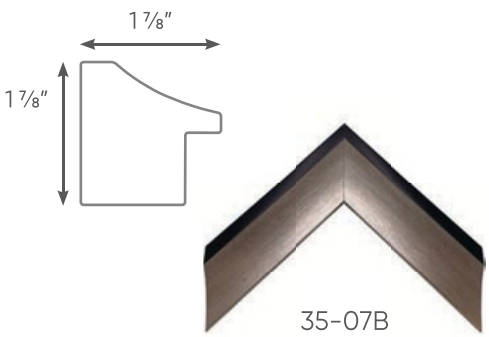

35-07B
Silver

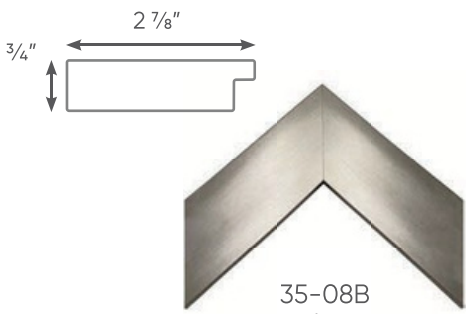

35-08B
Silver

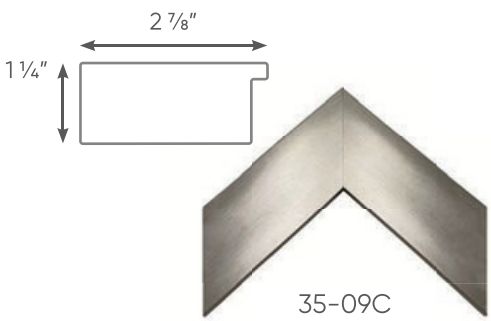

35-09C
Silver

Medium Tone

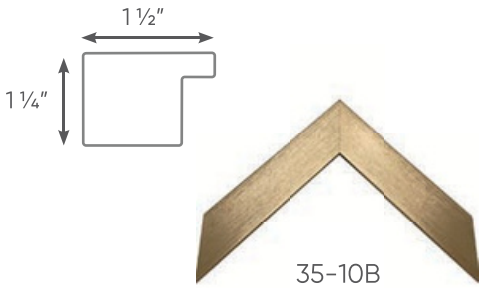

35-10B
Gold

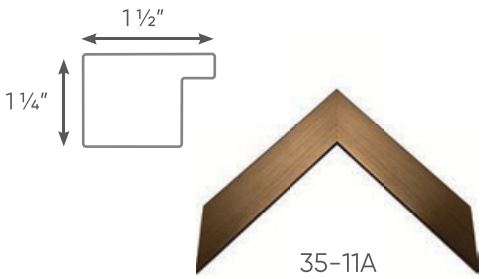

35-11A
Bronze

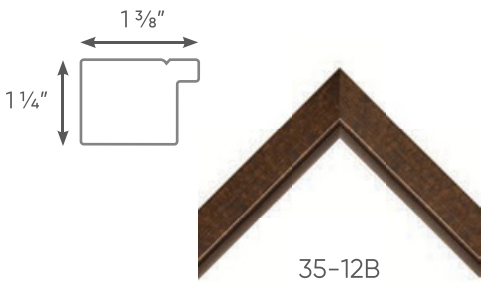

35-12B
Bronz
e

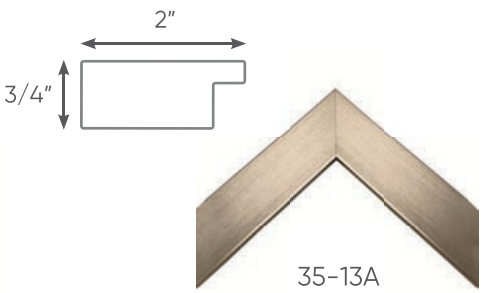

35-13A
Gold

Additional framing options available upon request.

Contemporary Dark Mouldings

Dark Tone

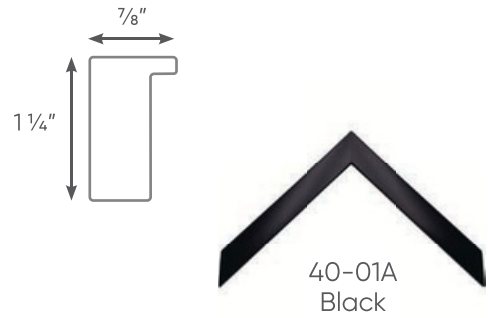

40-01A
Black

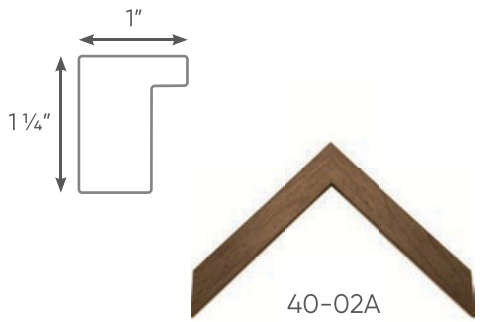

40-02A
Walnut

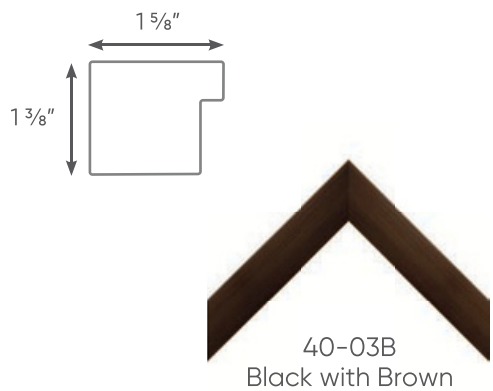

40-03B
Black with Brown

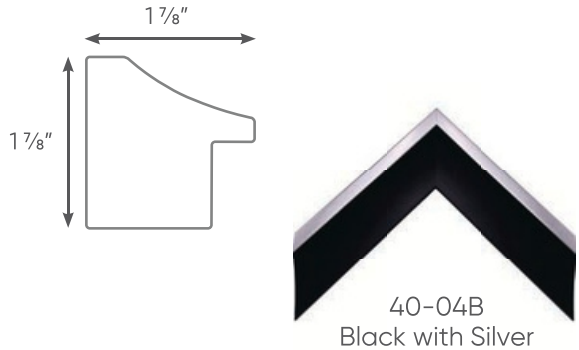

40-04B
Black with Silver

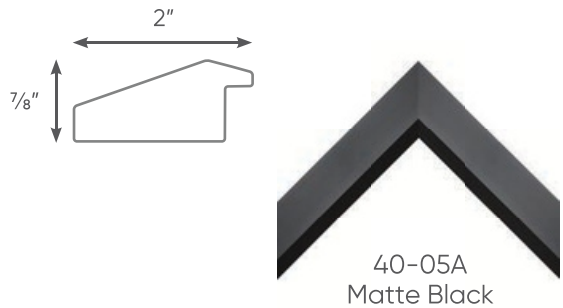

40-05A
Matte Black

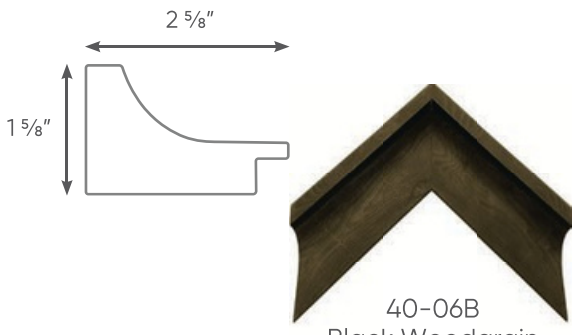

40-06B
Black Woodgrain

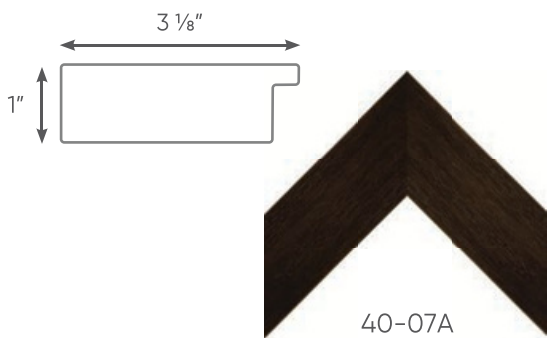

40-07A
Dark Walnut

Additional framing options available upon request.

Animals and Figurative



Artist: Jenny Foster

Photo Illustration of Gallery Wrapped Canvas

Connect • Care • Flourish

Nathaniel Mather



TR44360



TR45706



TR45704



TR44361



TR45703



TR44352



TR45697



TR44365



TR45696



TR45698



TR44356



TR44355

Nathaniel Mather



TR45702



TR45701



TR44351



TR45705



TR45707



TR45708


TR45692


TR45693


TR45688


TR45691


TR45690


TR45694



TR44358



TR44359



TR45683



TR44363



TR45684



TR17503



TR17504



TR17508



TR17506



TR17507



TR17505



TR16012



TR16014



TR2227



TR2228



TR2179



TR5067



TR2177



TR2225



TR5065



TR5070



TR5066



TR5068

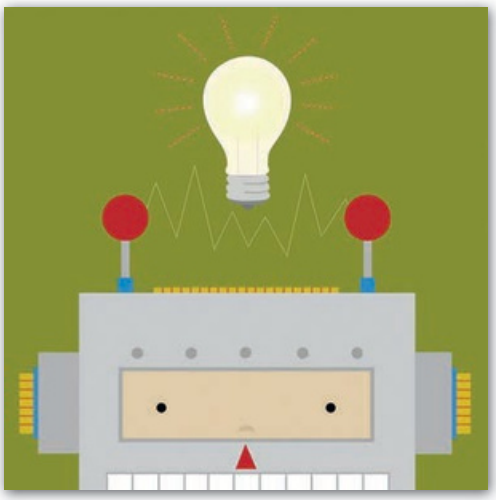

TR15593



TR15582



TR15594



TR15595



TR15588



TR15592



TR22617



TR22620



TR22619



TR22633



TR22621



TR22625


TR43614


TR43613


TR43615


TR43618


TR43616


TR43617



TR43605



TR43607



TR43608



TR43611



TR43609



TR43610



TR17793



TR23755



TR23756



TR12745

Jenny Foster



TR12744



TR12746



TR23757



TR23758

Stacy Dynan



TR22355



TR22351



TR22350



TR22356

Stacy Dynan



TR12333



TR12334



TR22353



TR22354



TR45937



TR45938



TR45939



TR45940



TR45941



TR45931



TR45935



TR45933



TR45934



TR45932



TR45936



TR45499



TR45501



TR45503



TR45504



TR45507



TR45506



TR15528



TR15531



TR15530



TR15533



TR15532



TR15529

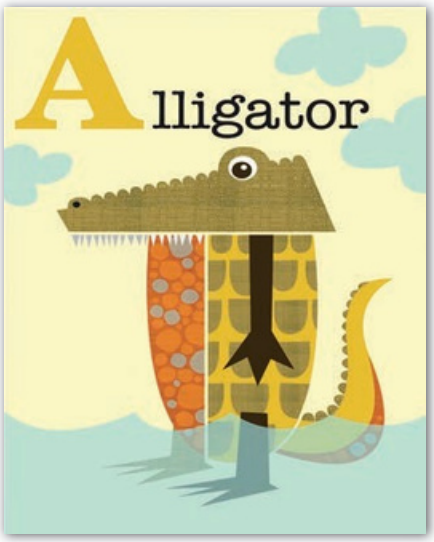

TR7526

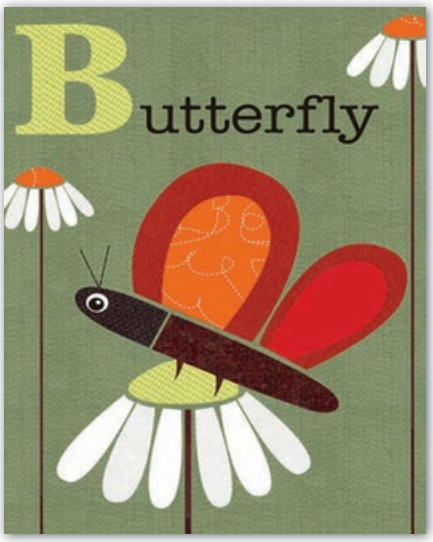

TR7527



TR7528

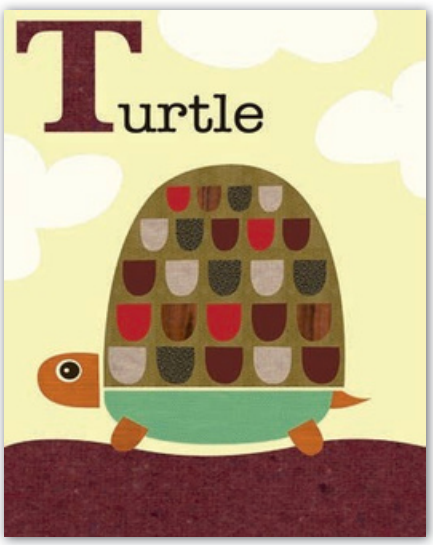

TR11309

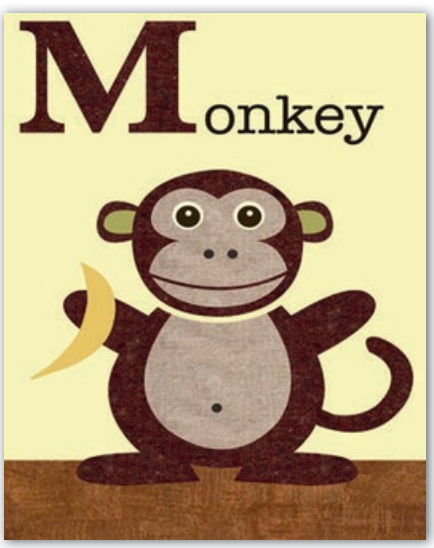

TR11307

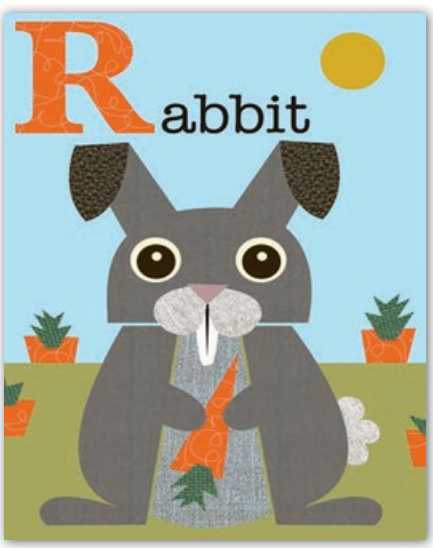

TR11308



TR45508



TR45509



TR45510



TR45511



TR9030



TR9031



TR45515



TR45513

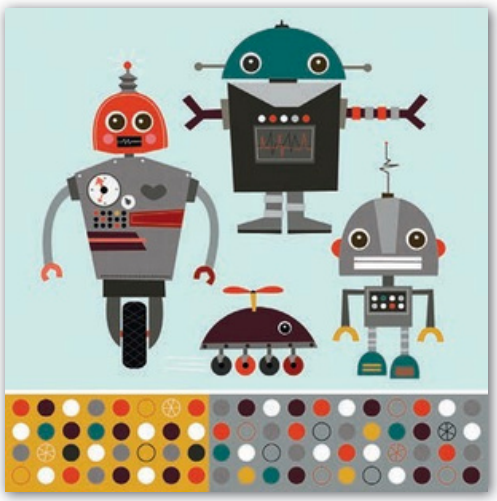

TR45514

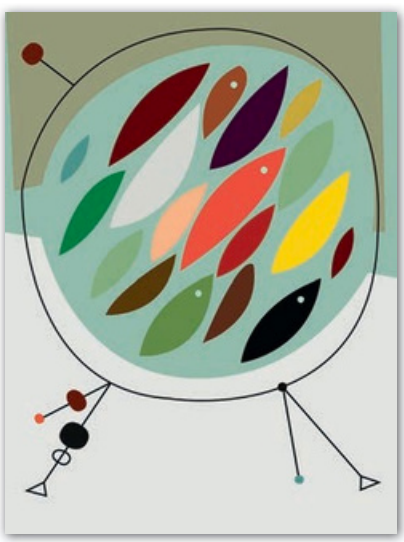

TR45516



TR45517

Abstract



Artist: Jennifer Sanchez

Photo Illustration of Edge Framed Canvas (white)



Connect • Care • Flourish

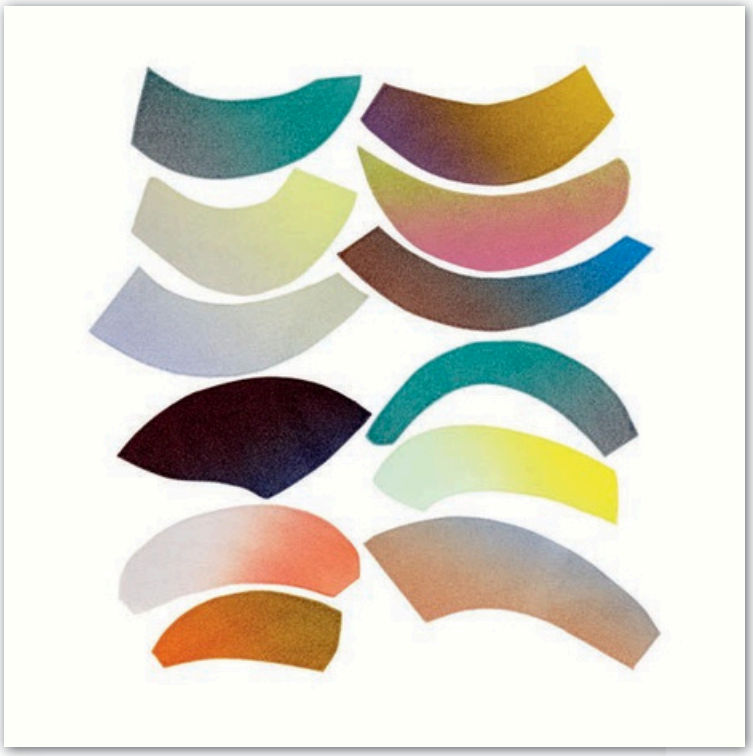

TR44218

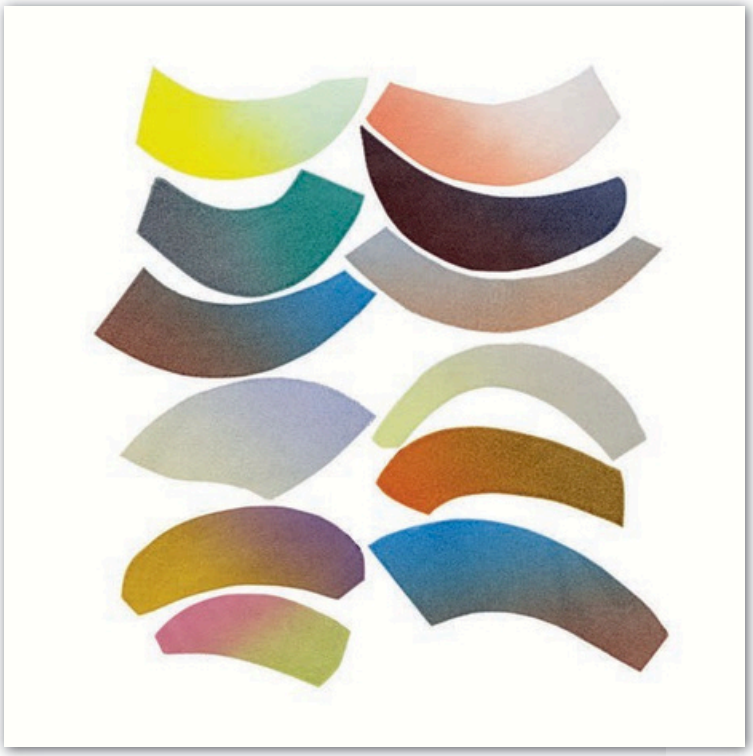

TR44219



TR44220



TR44221



TR44205



TR44204



TR44200



TR44201



TR44212



TR44215



TR46199



TR46206



TR46201



TR46208



TR46205



TR46204


TR22337


TR22339


TR22336


TR22341


TR22340


TR22344



TR36651



TR36652



TR44330



TR44338



TR44326



TR44339

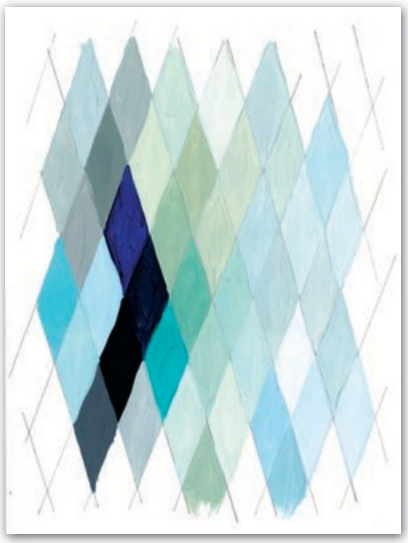

TR36660



TR36661



TR36656



TR36657



TR36659



TR36666


TR44463


TR44462


TR44470


TR44471


TR44473


TR44474


TR46018


TR46019


TR46021


TR46020


TR46022


TR46026


TR46029


TR46030


TR46032


TR46031


TR46034


TR46039



TR44085



TR44086



TR44088



TR44087



TR44090



TR44091


TR22327


TR22325


TR22326


TR22330


TR22332


TR22329

Photography



Artist: Donald Paulson

Photo Illustration of Gallery Wrapped Canvas



TR43083



TR43124



TR43125



TR43103



TR43084



TR43104



TR43087



TR43091

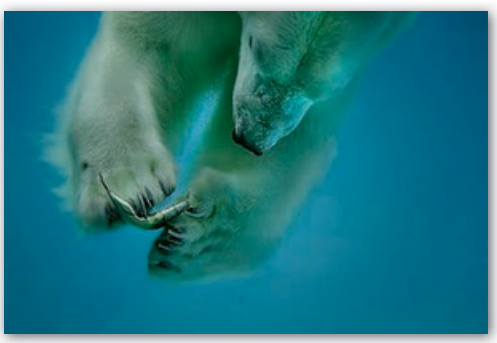

TR43102



TR43092



TR43099



TR35598



TR35452



TR43063



TR43065



TR35453



TR43064



TR43072


TR12649


TR12650


TR12653


TR12656


TR12654


TR12657


TR43059


TR43066


TR43067


TR43058


TR43061


TR43112



TR23081



TR23174



TR16427



TR13790



TR23202



TR23203


TR16393


TR16398


TR16400


TR16399


TR19453


TR19454



TR13692



TR13695



TR16389



TR16390



TR16391



TR16392



TR13848



TR13857

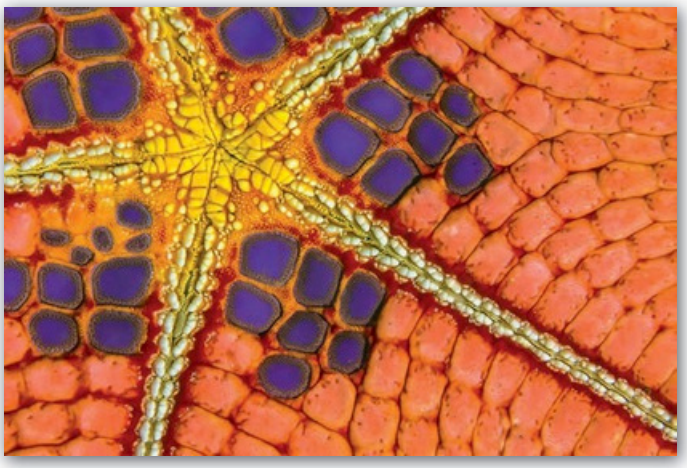

TR42926



TR13871

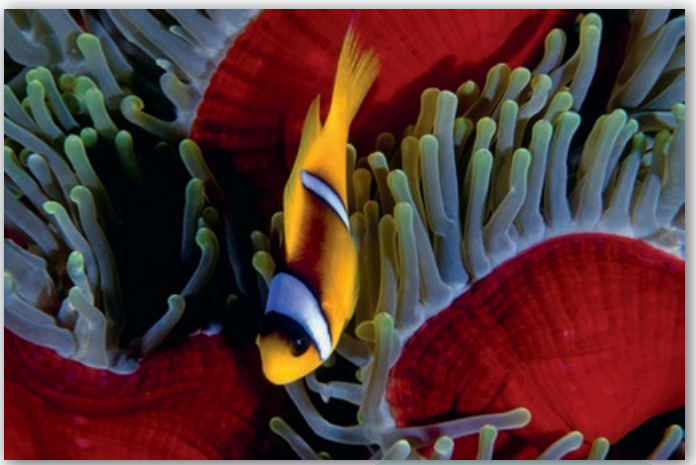

TR13877



TR42943



TR32925



TR32928



TR32930



TR32931



TR17708



TR17709



TR17710



TR17711



TR35645



TR35646



TR35652



TR35653

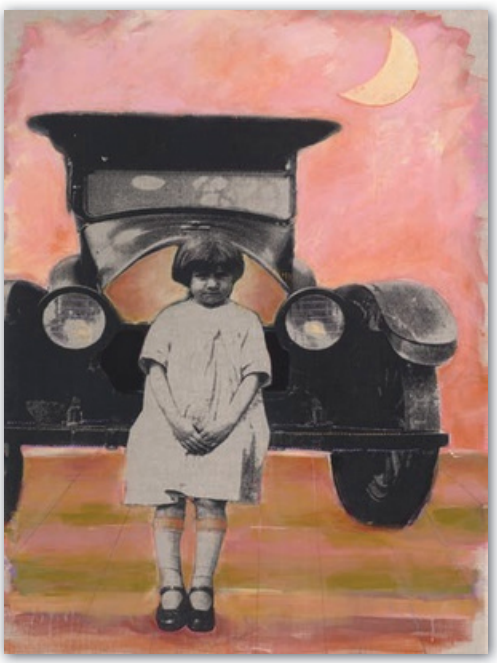

TR35650



TR35649



ITANI DESIGN CONCEPTS

• HEALTHCARE & COMMERCIAL INTERIOR DESIGN •

Connect • Care • Flourish

GHINA ITANI
661.549.5886
ghina@itanidc.com
WWW.ITANIDC.COM
GC LIC# 933275

CHID Certified Healthcare Interior Designer
NCIDQ Certified
edac from The Center for Health Design
AMERICAN SOCIETY OF INTERIOR DESIGNERS